**Department of Electrical Engineering**
**(Session 2004– 2008)**

# Development of low cost 18-channel simultaneous sampling EEG data acquisition system for Brain Computer Interfacing

**Group Members**

1. Adnan Muhammad Niazi
2. Muhammad Tahir
3. Naeem Ul Islam

**Project Advisor**

Dr.Syed Waqar Shah

N-W.F.P University of Engineering & Technology, Peshawar.

Department of Electrical Engineering
N-W.F.P University of Engineering & Technology (U.E.T)
Peshawar, Pakistan.
**July 2008**

This report is submitted to Department of Electrical Engineering as partial fulfillment of Bachelors of Science degree in Electrical Engineering.

## Approved By

1. Chairman

_____

2. Project Advisor

_____

3. Examiner(s)

_____

**Submitted By**
Adnan Muhammad Niazi
Muhammad Tahir
Naeem Ul Islam

**Dedicated to our families**

# ABSTRACT

Brain computer interface provides an exciting new way for patients with serve motor disabilities to communicate with the world around them. Since its perception I 990, this field of mind machine in interface has seen some major advancements. Locked-in patients have now a way to communicate to an extent that was never though possible. However with all these advancements the systems used today are painfully slow and only perform a fraction of task that normal human being is able to perform in the same given amount of time. This project aims to increases the speed of present system so that it is less boring and faster to use.

This undergraduate project is an attempt to introduce this new technology to Pakistan. Although many attempts had been made in the past 2 or 3 years in many universities in Pakistan to successfully pull off this project, the fact is that none they succeeded in doing so. With all the time, money and effort that we have put in this project we hope that we will successfully pull off this project and would not suffer the same fate as that of our contemporaries.

Due to the lack of timely funding and the fact that all the components for the project had to be exported from abroad, this project is taking more time then it should have. Due to these and other reasons we were unable to complete this project in the amount of time given to us. However we are not bothered by that .We will continue to pursue our goals and complete this project no matter how long it takes. We don't want our and the university's investment to go to waste. So we will continue this project till the day we get some useful results.

Brain computer interface is very difficult and deeply involved project requiring expertise from various disciplines to work in tandem. This project was divided into two main portions, the hardware and the software. The hardware captures

the brainwaves and gives them to the software. The software does all the preprocessing, classification etc. All those who have successfully pulled off this project to date have bought the hardware readymade so all they had to do is to concentrate their entire efforts into the software. However with the hardware that costs 7000 Euros at the very least, it’s a luxury that we were unable to afford. So in these circumstances we decided to design and fabricate our own hardware. That’s why this project is taking so long to complete.

This thesis report attempts to give a brief introduction to brain computer interface. Then we explain in great detail the technical issues involved in the design and fabrication of the hardware stage of this project.Since the software works on the signal coming from the hardware that’s why we are unable to provide any information whatsoever about the algorithms in the software. Software is implementable only when one has a working hardware. So this thesis report will explain the hardware part of the project only.

# ACKNOWLEDGEMENTS

Doing a difficult project like this at an undergraduate level was a daunting and many times a very stressful job .without the help and support of all of theses people mentioned below I don't think we would have made any progress.

We are highly indebted to Cypress Semiconductors, USA for donating us USB and PSoC development kits worth 1200$ for free. I would like to thanks Ms.Helena Martins and Mr.Patrick Kane at Cypress semiconductors for helping us in acquiring these items

We would like to express my gratitude to Dr. Syed Waqar Shah for supervising this project and providing us support whenever we asked for it.
We would also like to thank Dr. Inayt Ullah Babar and Dr. Syed Waqar Shah for their joint efforts in helping us acquire funding for this project from the university. No final year project got so much funding in the entire history of the UET. We are very thankful to both of them for making it possible.
There is absolutely no way for us to thank Dr. Siraj- Ul- Islam for all the logistical and moral support that he provided during the entire course of this project.

Many thanks to Mr. Muhammad Sarwar Khan, our director finance for allowing us to use his credit for online orders and for being very cooperative.
It's difficult for us to express my gratitude to Mr. Asmat, CEO Transcontinental Pharma for helping us in deciding the manufacturer of EEG cap. We are thankful to him for always helping and supporting us and in insuring us to commercialize this technology in Pakistan once it's successfully implemented.

No amount of gratitude will be enough for Mr. Falk Minow at Easy Cap, Germany for giving us the EEG cap for less than half its original price.

Last, but not the least, we would thank all my colleagues for always supporting me and uplifting my morale whenever it got low.

Adnan Muhammad Niazi

Naeem Ul Islam

Muhammad Tahir

# CHAPTER 1

# INTRODUCTION

## 1.1 BRAIN COMPUTER INTERFACE?

Brain-computer interface (BCI), sometimes called a direct neural interface or a brain-machine interface, is a direct communication pathway between a human or animal brain and an external device.

Man-Machine interface has been one of the growing fields of research and development in recent years. Most of the effort has been dedicated to the design of user-friendly or ergonomic systems by means of innovative interfaces such as emailing, typing, home automation and virtual reality. A direct brain-computer interface would add a new dimension to man-machine interaction. Interesting research work in this direction has been already initiated, motivated by the hope to create new communication channels for those with severe motor disabilities

## 1.2 MOTIVATION

## 1.3 ELECTROENCEPHALOGRAM: THE BASIS OF BRAIN COMPUTER INTERFACE.

Our brain is producing brain wave 24/7 whether we are ware of it or not. These brain waves are technically termed as Electroencephalogram or EEG. These EEG signals are produced by neuronal activity in the brain .As one cant stop neurons from doing what the y do this means there is no way that that person can say that he has no brain waves. Although a person can’t stop his brain waves from being produced, he can control what brain waves are produced. This

forms the basis of Brain computer interface. Every brain computer interface system requires EEG signals to work on.

There are two ways to acquire the EEG signals:

1. The Invasive approach
2. The Non - invasive approach

### 1.3.1. THE INVASIVE APPROACH

In the invasive approach, micro electrodes are implanted in the brain of the subject. These microelectrodes are linked to individual neurons.
Operating wirelessly these electrodes emit data obtained from the individual neurons that they are hooked to.

**Advantages**

The advantage of this approach is that the data coming from the electrodes belong to a signal neuron as compared to the aggregate of signals from million of neurons in the non-invasive approach. Thus the signals obtained from these electrodes are very easy to interpret and require no principle component analysis or blind source separation algorithms to break down the signal into many signals each produced by their respective producer.

Furthermore, the signals obtain are of very high quality and do not contain any motion related artifacts that plague the EEG signal in non-invasive approach.

**Disadvantages**

Although very useful, this technology requires cranial surgery to be performed in order to implant these electrodes. With the technology still in its infancy it will take a lot of time to persuade more and more human subjects to undergo this

surgical procedure. Presently this technology is used extensively on monkeys and rats.

### 1.3.2. THE NON-INVASIVE APPROACH

In this approach, electrodes are place on the scalp and these electrodes pick up the neuronal activity underneath them.

**Advantages**

This procedure requires no surgery. All we have to do is to fix the electrodes on the scalp with the help of a conductive gel. In the invasive approach, the only subject can be the person with electrodes implanted in his brain .with the non-invasive approach any person can use the system. The system is no longer limited to just one particular subject.

**Disadvantages**

The signals captured by these electrodes are the aggregate of millions of neurons rather the just one neuron. Consequently to get some meaningful interpretation of the signals captured, each signal must be decomposed into the individual sources that make them up. This is the blind source separation. Another disadvantage of this approach is that it suffers from more artifacts than the invasive approach. Displacement of electrode from their position generates spurious waveforms of no significance what so ever thereby completely or partially destroying the original data during that instant. Sophisticated signal processing algorithms have been developed to overcome this problem to some extent. Moreover, fixing the cap and electrodes onto the subject requires at least half an hour or so at the very best. So just making the system up and running takes a lot of time. Furthermore, the cap looks a bit odd and alien to many and many subject are shy of using it in front of other people. But as surgery was not

an option for us therefore we are using the noninvasive approach despite of all its discrepancies

## 1.4 CONSTITUENTS OF EEG SIGNALS

Few of the constituents of an EEG signal are given below:

### 1.4.1. DELTA (0.1 TO 3 HZ)

The lowest frequencies are delta. These are less than 4 Hz and occur in deep sleep and in some abnormal processes and also during experiences of "empathy state". It reflects unconscious mind. It is the dominant rhythm in infants up to one year of age and it is present in stages 3 and 4 of sleep. It tends to be the highest in amplitude and the slowest waves. We increase Delta waves in order to decrease our awareness of the physical world. We also access information in our unconscious mind through Delta waves. Peak performers decrease Delta waves when high focus and peak performance are required. However, most individuals diagnosed with Attention Deficit Disorder, naturally increase rather than decrease Delta activity when trying to focus. The inappropriate Delta response often severely restricts the ability to focus and maintain attention. It is as if the brain is locked into a perpetual drowsy state. Another way to look at Delta is to imagine you are driving in a car and you shift into 1st gear....you're not going to get anywhere very fast. So Delta would represent 1st gear.

### 1.4.2. THETA (4-8 HZ)

The next brainwave is theta. Theta activity has a frequency of 3.5 to 7.5 Hz and is classed as "slow" activity. It is seen in connection with creativity, intuition, daydreaming, and fantasizing and is a repository for memories, emotions, and

sensations. Theta waves are strong during internal focus, meditation, prayer, and spiritual awareness. It reflects the state between wakefulness and sleep. It relates to subconscious.

It is abnormal in awake adults but is perfectly normal in children up to 13 years old. It is also normal during sleep. Theta is believed to reflect activity from the limbic system and hippocampus regions. Theta is observed in anxiety, behavioral activation and behavioral inhibition.

When the theta rhythm appears to function normally it mediates and/or promotes adaptive, complex behaviors such as learning and memory. Under unusual emotional circumstances, such as stress or disease states, there may be an imbalance which results in aberrant behavior. Back to our car example, Theta would be considered 2nd gear. Not as slow as 1st gear (Delta) but still not very fast.

### 1.4.3. ALPHA (8-12 HZ)

Alpha waves are those between 7.5 and 13(Hz). Alpha waves will peak around 10Hz. Good healthy alpha production promotes mental resourcefulness, aids in the ability to mentally coordinate, and enhances overall sense of relaxation and fatigue. In this state you can move quickly and efficiently to accomplish whatever task is at hand. When Alpha predominates most people feel at ease and calm. Alpha appears to bridge the conscious to the subconscious.

It is the major rhythm seen in normal relaxed adults - it is present during most of life especially beyond the thirteenth year when it dominates the resting tracing.
Alpha rhythms are reported to be derived from the white matter of the brain. The white matter can be considered the part of the brain that connects all parts with each other. Alpha is a common state for the brain and occurs whenever a person

is alert (it is a marker for alertness and sleep), but not actively processing information. They are strongest over the occipital (back of the head) cortex and also over frontal cortex. Alpha has been linked to extroversion (introverts show less), creativity (creative subjects show alpha when listening and coming to a solution for creative problems), and mental work. When your alpha is with in normal ranges we tend to also experience good moods, see the world truthfully, and have a sense of calmness. Alpha is one of the brain's most important frequencies to learn and use information taught in the classroom and on the job. You can increase alpha by closing your eyes or deep breathing or decrease alpha by thinking or calculating.

Alpha-Theta training can create an increase in sensation, abstract thinking and self-control. In our car scenario, Alpha would represent neutral or idle. Alpha allows us to shift easily from one task to another.

### 1.4.4. BETA (ABOVE 12 HZ)

Beta activity is 'fast' activity. It has a frequency of 14 and greater Hz. It reflects desynchronized active brain tissue. It is usually seen on both sides in symmetrical distribution and is most evident frontally. It may be absent or reduced in areas of cortical damage. It is generally regarded as a normal rhythm and is the dominant rhythm in those who are alert or anxious or who have their eyes open. It is the state that most of brain is in when we have our eyes open and are listening and thinking during analytical problem solving, judgment, decision making, processing information about the world around us. Beta would represent overdrive or hyper drive in our car scenario. The beta band has a relatively large range, and has been divided into low, midrange and high.

### 1.4.5. GAMMA (ABOVE 36 HZ)

Gamma is measured between 36 – 44 (Hz) and is the only frequency group found in every part of the brain. When the brain needs to simultaneously process information from different areas, it's hypothesized that the 40Hz activity consolidates the required areas for simultaneous processing. A good memory is associated with well-regulated and efficient 40Hz activity, whereas a 40Hz deficiency creates learning disabilities.

## 1.5 APPLICATIONS OF BCI

Brain Computer Interface has a lot of applications in many realms of life. Here we discuss some of them.

### 1.5.1. MEDICAL

#### i. Helping the disabled

By far the most useful use of this technology is in helping the disable person communicate with the world in way that was previously thought impossible. Companies like g.tec have made a system that allows patients to control everything in their house by just thinking about it. If they want to turn on the light or any other thing of that sort they just have to think about it and it would be done.

G.Tec has all made a system that allows disabled person to browse his computer and compose an email just by thinking about the alphabets. However all these systems are still very expensive and are in trail stages. Countries like Pakistan need something less expensive .one of our main aim is to first design a fully functional brain computer interface system and then finding innovative ways to

decease the cost so as to make the technology affordable to an average Pakistani.

### ii. Prosthetics

Prosthetic limbs have been developed that are operated by just thinking about the movements. So far no commercial model of this technology has been introduced in the market.

### iii. Wheel chairs

Many researchers have tried to interface a wheel chair with the human brain. Michael Callahan of the University of Illinoi and CEO of Audeo has introduced a wheel chair that's operated whenever a person has the intent to speak. Although not strictly a brain computer interface, its remarkable similar to it. In brain computer interface we take signals from the brain and use them to operate the device. Callahan has taken the signal coming to the throat from the brain and used them to operate the wheel chair. So it can classify as another form of brain computer interface. The wheelchair that he developed is incredibly accurate.

### iv. Cure for autism or ADD (Attention Deficit Disorder)

About 1 in every 6 children in the US is suffering from this disease. The patient suffering from this disease is unable t o concentrate on the task in hand or shows a repetitive compulsive attitude about something. For example, if a child's bed is slightly displaced from the position it used to be, then the child would become very upset about it and will do anything to bring his bed to the way it was before. Children who suffer from ADD are unable to pay attention to anything that their parents or other concerned say to them. In this disease the victims are not only the children but their parents as well. Parents are the silent victims of this disease. The exact causes of this disease are still unknown to the researchers. No drug or medicine has been able successfully cure ADD.

**Treatment by BCI**

Now a radical new treatment based on brain computer interface has been developed to completely cure this disease. This procedure is called Neurofeedback. Neurofeedback is a form of biofeedback which allows the computer to study a persons brain waves and then providing a feedback to the user that helps in producing the appropriate brain waves.

Researchers have found out that children suffering from ADD show very small alpha activity in the brain. Neurofeedback is procedure by which this alpha activity is increased. With increased alpha activity a person is able to concentrate better.

Neurofeedback involves playing games on the computer. However these games are different from ordinary games. They are operated by the alpha activity in your brain. For example, if the patient is playing NEED FOR SPEED game then the car will accelerate only if the person is producing a lot of alpha waves. More alpha waves mean more concentration. If the person is producing less alpha wave the car decelerates. There is no way the car can accelerate unless the subject starts concentrating once again. Thus by using this procedure for about 12 weeks the person becomes completely free of ADD. This procedure is very powerful. Just the curiosity of how your brain is interfaced with the game is enough for many children to concentrate on the game. The results of this procedure are 95% which is exceptionally good.

EEG Chicago is one of the very famous clinics in Chicago, USA that helps people with ADD or other neurological disorders with the help Nuerofeedback.

### 1.5.2. GAMING INDUSTRY

Brain computer interface has the potential to develop into a multi billion dollar gaming industry. With gamers becoming increasingly bored of the games that are available in the market, the designers are now looking to completely change the landscape of the gaming industry by employing only the user's thoughts to operate the game thus giving the gamers a level of control they never felt before. Companies like emotive have produced games that are operated just by thoughts. Although still very expensive these games are the first step in could be the biggest revolution in the history of the gaming industry.

**Figure 1: Lifting a heavy object just by thinking about it**

### 1.5.3. MUSIC INDUSTRY

A musical composer himself, Professor Eduardo Reck Miranda from the University of Plymouth in the UK is developing a brain-computer music interface (BCMI) that composes and performs musical pieces on an automated piano using information extracted from specific altered brain signals.

The musical brain cap uses the g.tec BCI to extract EEG features from test subjects. Band power from different frequency bands controls a generative system that composes music on the fly based on rules of musical grammar. The

Simulink Hjorth block extracts EEG signal complexity and uses it to control the tempo of the musical piece (the more complex the signal, the faster the music). The musical generative system output is then connected via a MIDI interface to a mechanical piano that plays the composed musical piece.

### 1.5.4. MILITARY USES

The Air Force is interested in using brain-body actuated control to make faster responses possible for fighter pilots [3]. While brain-body actuated control is not a true BCI, it may still provide motivations for why a BCI could prove useful in the future. In the system discussed by Nelson [56], a combination of EEG signals and artifacts (Eye movement, body movement, etc.) combine to create a signal that can be used to fly a virtual plane. The article does not state whether or not this speeds up a pilot's responses or whether such a system might prove useful in locating relevant targets. In general, one can imagine that the military would have multiple uses for a system that speeds up response times in areas such as tactical maneuvering and perhaps even in targeting and firing weapons. Currently, the main focus of Air Force research is for Alternative Control Technology (ACT). The goal of the ACT program is to enable communication with computers while the computer user’s hands are busy with other tasks. As an example, alternative controls may be used to enable maintenance technicians to manually operate test equipment while accessing schematics on a head-mounted display [54]. While the AirForce has a special interest in hands-off control, this kind of control may be of interest in non-military areas. One can imagine surgeons switching augmented displays during surgery without having to talk or use their hands.

## 1.6 OUR PROJECT --- THOUGHT-OPERATED KEYBOARD

Our project is an attempt to make a thought operated key board for patients with severe motor disabilities. All they have to do to operate the system will be to think about the alphabets and these alphabets will automatically appear on the computer screen thanks to the power of brain computer interface.

## 1.7 THESIS OVERVIEW

The rest of this thesis is organized as follows:

Chapter 2 describes the related work done in this field. Some of the concepts explained in this section are borrowed by this AR Framework. Chapter 3 presents different techniques that can be used for tracking a hand in a video. Chapter 4 describes the software architecture of our system. It explains in somewhat detail the strategy and implementation specific concepts. Chapter 5 analyzes the present system, proposes the future enhancements that can be made in this program, and the sample applications. Chapter 6 concludes the thesis. At the end, appendices are provided to give a reader some background information related to the project. Reference section contains the information about sources of information quoted in this report.

# CHAPTER 2

## REVIEW OF RELATED WORK

In this chapter, we review prior work in the field of Brain Computer Interface (BCI) from which our work draws upon.

University of plymoth Brain computer interface
Professor eduado at the university of plymuth

Kieo university japan brain computer interface

g.tec Austria brain computer interface

University of cairo brain computer interface
American university of beruit brain computerin terface

# CHAPTER 3

# EEG DATA ACQUISITION SYSTEM -- DESIGN

There are two main stages involved in the development of this project

1. Hardware stage
2. Software stage

One can't implement the software stage unless one has a fully functional hardware. So all our time and energy is now focused on the hardware stage. Once the hardware is ready it will be general and flexible enough to be used not just for Thought operated keyboard but for a host of other brain computer interface applications as well.

## 3.1 THE HARDWARE STAGE

### 3.1.1 OVERVIEW

Our hardware is an 18 channel simultaneous sampling non-multiplexed 16-bit high speed USB data acquisition systems interfaced to the LABview software with LABview Visa. The hardware has a bandwidth of 1 KHz and thus can be used for not EEG but also ECK, EMG and ECoG signals as well. The 16-bit hardware has 18 channels and the number of channels can be further increased by adding amplifier and digitizer modules and making some minor software changes. The hardware has 6 independent subject grounds so that the same hardware can be used with six different subjects simultaneously .the hardware allows the user to select whether they want differential or referential recording. In the differential recording there is no common reference for all channels whereas

in the referential recording each channel refers a single reference signal. Differential and referential recording each has its own particular uses. The gain of every gain stage of the hardware is configurable so that is can be used with not only for EEG but also ECG, EMG and ECoG . The hardware allows the user to select between a 4th order and 8th order Bessel filter. The software driving the hardware will be flexible enough to collect the data at a user defined rate so as not to overburden the computer with too much samples. The USB interface allows the hardware to be plugged into any computer that supports USB 2.0.

### 3.1.2 WHY MODULAR HARDWARE?

The design is highly modular which means that it's built in manageable pieces. There are 7 modules in this hardware. Modular design is highly recommended for prototypes. This is because it makes designs more manageable. If something goes wrong in a module then only that particular module needs to be reworked or redesigned. So it saves alto of time in debugging. Secondly if you don't divide your design in modules then the PCB becomes very complex. To route a very compact and dense PCB you need a lot of layers about 4 to 6 layers depending on the design. We only have the technology and expertise to make at the most a 2 layered PCB. We don't have hot hydraulic presses, through hole plating bath solutions and fiducial aligning systems necessary for making a 6 layered circuit board. So that's why we divide the circuit into small modules. Each module is simple enough to be routed on a two layered PCB. The disadvantage of modular design is they are very bulky. They require more copper clad and copper clads are very expensive. Moreover modular design requires special attention to the detail about power supply distribution and decoupling to the different daughter cards. There is an additional disadvantage in using a modular design. In order to connect the different daughter cards to their respective backplane you need some exotic connectors. Connectors are really expensive especially the SMD

ones. One prefers the SMD component in the design because SMD components require no drilling of holes. Holes are very difficult to drill especially when the substrate material is the fiber glass. Moreover, its difficult to precisely drill the holes at exactly the right spot without some expensive and sophisticated CAD/CAM machinery.

So for prototypes its better to avoid through-hole component and that's exactly what we did although we payed a comparatively higher price for these SMD components.

### 3.1.3 HARDWARE MODULES

The different modules that our hardware was divided into are:

1. EEG cap and its own power supply
2. Amplifier and filter module
3. Digitizer module or ADC module
4. Digital isolation module
5. USB module
6. Power supply module

### 3.1.4 EEG CAP and ITS POWER SUPPLY

The EEG signal on the scalp is very weak .its about 10 to 100uV in amplitude with a DC offset that's typical 100mV.With such small signals embedded in such a large DC offset, it becomes very difficult to amplify the signal. That's why commercial EEG amplifier are very expensive .The cheapest of them will cost around 7000 Euros. All those who have successfully implemented BCI had ready made hardware because they received huge and timely fun dings from either their institution or governments. We only had a budget of 160,000RS so we

couldn’t afford the luxuries that our contemporaries could. So we decided to make our own hardware and thus had to manage our hardware in this small amount of money.

EEG cap is basic component of the hardware. It is has as 64 electrode slots according to 10-20 montage. Although this cap has slots for 64 electrodes, we only bought 32 electrodes this is because these electrodes are very expensive. Moreover, we don’t need 64 electrodes at all because our hardware can’t handle so many channels. It has only 18 channels. So 32 electrodes will do the job.

Each electrode has a unity gain buffer in it. This unity gain buffer increases the drive strength of the EEG signal thereby making it immune to the 50Hz interference of the power lines and the noise produced by fluorescent tubes.

These electrodes are powered by their own battery operated power supply unit. The cap comes with 33 2mm banana leads which will be used to give EEG signals from the scalp to our hardware. The 33rd electrode is the system ground electrode. This ground electrode is connected to the system ground of our hardware. When connecting any two electrical systems, in this case the EEG cap with it power supply circuit and our own hardware, then they must all refer to the same ground. That’s precisely the reason we are connecting the GND banana plug from the EEG cap to the System ground of our hardware.

### 3.1.5 Amplifier and filter module

This module has six different subsections:

A. Burr brown EMI/RFI filter
B. Instrumentation amplifier stage
C. High pass filter stage

D. Variable gain amplifier stage
E. Low pass anti-aliasing filter stage
F. Buffer stage

## A. Burr brown EMI/RFI filter stage

As the signal are coming from very long wires these wires thus start acting like very large antennas catching a lot of radio frequency and electromagnetic interference from the nearby wires and circuitry. This high frequency noise if passed through the instrumentation amplifier stage will be rectified due to the internal construction of the INA itself. This rectification of high frequency noise signal will appear as a non constant DC offset. This DC offset limits our ability to apply large gains because it will saturate the amplifier stage of the INA. So it's better not to allow this RFI/EMI to enter the INA in the first place rather than to find a solution to the DC offset problem. That's where Burr Brown filter comes into picture. Burr brown Filter was first introduced by the Burr Brown instruments which is now acquired by the Texas Instruments. It consists of two symmetrical RC filters. Their function is to ground the high frequency signals coming from the electrodes. Both the resistor and the capacitor s must be perfectly matched. If they are not perfectly matched then the voltage drop across one capacitor will be different then the voltage drop across the other capacitor. This will result in the production of a differential voltage. This differential voltage will be amplified by the INA and will appear in the out put of the INA. So it's absolutely necessary to use matching resistor and capacitors. There is a new product called X2Y capacitor. They can be used whenever two matching capacitors are required. Although I love to use X2Y capacitor because of their superior performance characteristics, I was unable to use them in this project because they were not available in the values that I needed. Nevertheless I wasted a lot of time understanding them.

Burr brown filter needs matching resistor and capacitor. No matter how hard you try you will never exactly match these two RC filters. Even with 0.01% tolerance parts will have some mismatch. To get around this problem a third capacitor is added with a value 10 to 20 times larger then the capacitors in the RC filter. This capacitor helps in making the two capacitor terminals at the same potential, thereby avoiding the problem of development of differential signal due to resistor and capacitor mismatch. Still it's better to use as precise resistor and capacitor as possible.

**Design Procedure for EMI/RFI filter: A Cook Book Approach**

The following general rules will greatly ease the design of an RC EMI/RFI input filter.

1. First, decide on the value of the two series resistors while ensuring that the previous circuitry can adequately drive this impedance. With typical values between 2KΩ and 10KΩ, these resistors should not contribute more noise than that of the in-amp itself. Using a pair of 2KΩ, resistors will add a Johnson noise of 8nV/√Hz; this increases to 11nV/√Hz with 4KΩ resistors and to 18nV/√Hz with 10KΩ resistors (in our case the input referred noise of the INA is 14nV/√Hz.

   In our design 2.4k resistors are used and the noise added by them comes out to be 13.57nV/√Hz which is less then that of the amplifier itself.

2. Select an appropriate value for capacitor C2, which sets the filter's differential (signal) bandwidth. It's always best to set this as low as possible without attenuating the input signal. A differential bandwidth of 10 times the highest signal frequency is usually adequate.3. Then select

values for capacitors C1a and C1b, which set the common-mode bandwidth. For decent AC CMR, these should be 10% the value of C2 or less. The common-mode bandwidth should always be less than 10% of the in-amp's bandwidth at unity gain.

$$FilterFreq_{DIFF} = \frac{1}{2\pi R(2\,C_D + C_C + C_G)}$$

$$FilterFreq_{CM} = \frac{1}{2\pi R(C_C + C_G)}$$

In our design CD is 1800pF and Cc capacitors are 1000pF.the CG is the gate capacitance of the inamp and is a5pF as mentioned in the datasheet. The amplifiers unity gain bandwidth is 1500KHz.these capacitor values give us a differential bandwidth of 1792Hz and a common mode bandwidth of 65 KHz which is less than the 10% of the inamps bandwidth at the unity gain. The Johnson noise added by the resistors is 13.57nV/√Hz which is less then the 14nV/√Hz of the amplifier itself. As the resistors and capacitor in the burr brown filter are directly in the signal chain, therefore high quality resistor and capacitors were used to insure no signal distortion or anything of that sort. The capacitors used are of COG temperature grade and the resistor is metal films which are the most costly but the best in terms of very low noise characteristics available. Poor quality resistors may add noise which is in addition to their Johnson noise.

**B. <u>Instrumentation amplifier stage</u>**

The instrumentation amplifier used is AD8220 from analog devices. This is a very low power INA with JFET input stage. JFET amplifiers have a very low current noise .As the electrodes have a very high impedance (about 5 to 10kohms),therefore the current noise of the INA has more severe impact on the output then the voltage noise of the INA. This is because when current passes through a very large resistance it develops a very large potential drops. If it's an

amplifier then this voltage drop due to current noise will be amplified and will appear in the output. So for high impedance applications such as EEG, ECG, EMG and ECoG, it's good to use an instrumentation amplifier with the lowest current noise. Low current noise means smaller voltage drops even if the impedance of the electrodes is very large. When we selected AD8220 for our project, it was the lowest current noise INA available in the market. There are other reasons for selecting this INA. It has a very small footprint. It is very convenient to use. The gain is very easy to set with only one gain setting resistor. Moreover it has a very high CMRR which is essential for our application. It operates on single as well as dual supplies with supply voltage as large as ±18 volts. This allows us to provide large gain in the first stage of the amplifier without saturating the INA. As we don't know the amplitude of the EEG signal coming from the electrodes because measuring these signals (without any amplification) requires digital storage oscilloscope with a very decent bandwidth. Since we didn't have access to such sophisticated equipment, we made the design as flexible as possible. In every amplifier stage we have made the gain adjustable this allows us to select the maximum gain under any scenario without actually saturating the amplifier. With DIP-4 switches you can set the gain to any of the 16 possible values. As we have designed the gain to be selectable therefore this data acquisition system can be used not only to acquire EEG signals but also ECG, EMG, and ECoG signal. All of these signals have varying amplitudes and varying dc offset s thereby requiring different gain settings. This is exactly what our hardware provides; a different gain setting for every occasion.

### C. <u>High pass filter stage</u>

After the instrumentation amplifier stage the amplified signal goes into the high filter stage. This filter removes the dc offset in the signal thereby allowing us to apply larger gain at stages to come. As the DC offset can be positive or negative, its therefore absolutely necessary that the capacitor be connected in the right

polarity. However, there is no way for knowing beforehand whether the signal will be embedded in a positive or a negative offset. That's why polarized capacitors can't be in a situation like this. If polarized capacitor is used, then, it may become reversely biased, which may result in malfunctioning circuit. So that's why we have used a non polarized capacitor. Since this capacitor is directly in the signal path therefore the quality of this capacitor affects the quality of the overall signal. Unfortunately 10uF capacitor in COG (the highest quality capacitor) dielectric was not available so we used the next best material which is X7R. The r value must be as small as possible in order not to add too much Johnson noise into the system.

A value of 1Mohms was selected giving us a cut off of 0.0159hz.How ever we have also bought 0.1M resistors just in case the Johnson noise turns out to be too large we will replace the 1M resistors with 0.1M resistors. So our design is flexible in that sense. There is a rule of thumb that the R in the RC filter stage must be approximately equal to the parallel of the Rf and Ri resistors of the amplifier stage in front of it. Thus according to this rule of thumb 0.1M is a more deserving candidate to be used then the 1M resistor.

## D. <u>Variable gain amplifier</u>

The variable gain amplifier is based around AD7979 which is a high precision amplifier with 16 bit settling time. When digitizing signals with a 16 bit ADC you need the amplifiers to settle to ½ LSB by the time ADC goes to the sample Mode.AD797 has been especially designed for 16 bit ADCs as it ensures that by the time ADC samples the value that it samples is within ½ LSB of its original value. Many people ignore such detail when selecting an amplifier for the front stage of the ADC .They end up with a system that gives them a digitized output which does not resemble the original signal when reconstructed. So amplifiers must be matched to their respective ADC. Whenever an ADC is selected the manufacturer provides a list of amplifier that is compatible with the ADC. Don't

select an ADC if the manufacturer does not provide any information about the amplifiers compatible with the ADC. One way to find out which parts are good to be used with a given ADC is to study the schematics of the evaluation kit of the ADC .Every ADC has its evaluation kit which is designed and manufactured by the manufacturer of the ADC itself. Studying the schematic can gave us valuable information as to how to design our own circuit and which parts to use.

The gain of this stage is continuously variable with the use of 1K POT. This POT has 11 turns in it thus providing use to finely control the gain of this stage. However, the user may end up with providing too much gain. The gain is limited by using resistors selectable via DIP-4 switches. They ensure that no matter what gain is set using the POT, it never saturates the amplifier. We want a ±5 volts signal out of this amplifier stage. As AD797 is not a rail to amplifier ,meaning that if a ±5 volts supply is get connected to the rails then maximum linear out put swing will be less then ±5 volts. In AD797 case with ±5volts rail you get a maximum linear swing of ±2.5 volts. So clearly, if we want the linear swing to be ±5 volts then the then the rails must be connected to supply voltages higher than ±5 volts. That's why we have connected this amplifier to ±15volt rails. According to the datasheet with ±15volts rail you get a maximum linear swing of ±10volts.

## E. <u>Low pass anti-aliasing filter stage</u>

As P300 based brain computer interface requires both the amplitude and phase information of the signals. We need to select such a filter that can preserve both of these parameters.

Butterworth filter was rejected because it preserves the magnitude but distorts the phase. Chebyshev filter has a very steep roll off for a given order but it has ripples in both pass band and stop band and its phase response is not linear.

The only feasible filter was Bessel filter. It preserves both the magnitude as well as the phase response of the signal. Compared to all other filters, Bessel filter has the most gradual magnitude response. That's why to obtain a given attenuation at a given frequency Bessel filter requires the highest order. However this is the price one needs to pay for superior magnitude and phase response characteristics.

There are many ways to design a filter. No one designs a filter with pen pencil now- a- days. The Buzz about faster time to market has pushed manufacturers to develop intuitive software to help designers design very complex filter with little or no special knowhow about the filters nitty gritty details. Currently there are five companies which provide you software to help you design a complex filter using their chips (Opamps mainly). These vendors are:

i. **Texas instruments:** It provides a software called FilterPRO.
ii. **Analog Devices:** Analog devices has online tool available that can help-you design the filter
iii. **National semiconductors:** It also provides intuitive online tools and design filters
iv. **Maxim Semiconductor (previously Dallas Semiconductors):** Maxim semiconductors have a wide range of modular filters. These modular filters allow you to quickly build any order filter and any type of filter just by selecting the proper value of specific resistors. How ever the software tool provided by Maxim belongs to a bygone ERA. It's very non-intuitive and boring to use. It looks like you a re working on a software from the 80s.I

tried to use it but became so fed up with it that I abandoned the idea of using maxims filter products.

v. **Linear Technology:** By far the most intuitive and user friendly filter design software is provided by Linear Technology. The software called Filter CAD is in my opinion the best available to date. Linear technology has widest range of modular switched capacitor and linear RC filter blocks for you to select from. So that's why our vendor for filter is Linear Technology. It took us 5 minutes to build an 8th order Bessel filter .the software tool provided us the ability to check the step and impulse ,magnitude and phase response. It also provides you the ability to observe the effect of changing resistor values on the performance of the filter. So this software is clearly the best of all filter design tools. FilterCAD recommended that we should use LTC1563-2 which is quad RC linear filter. We are lucky that LTC1563-2 is linear filter and not a switched capacitor filter.

Switched capacitor filters are very noisy type of filter. You may end up with adding more noise to your system rather than filtering it out. Switched capacitor filter require a clock signal. Routing this clock signal on a two layered PCB is a hell of a challenge. If routed incorrectly this clock signal may ruin sensitive analog signals completely. So by using a linear approach rather than the switched capacitor one, we get the best performance from our filter.

Another option for filter design was to use Texas Instruments or analog devices tools to build the filters. However their approach is not modular. Their filters are built from individual Opamps. Thus a lot of Opamp packages are required to build a given order filter. The more Opamp packages used result in increased board space .It is also a very expensive approach compared to the modular approach. Modular filters will cost about half the price of that of individual Opamp filters. Modular filters are prefabricated. All you have to do is to install suitable value

resistors. This approach thus requires a lot less routing during the PCB layout stage, whereas, in the individual Opamp approach, there are a lot of critical nets to be routed. Improper routing may severely deteriorate the performance of the filter. So it's far easier and performance wise more beneficial to use modular filter rather than individual Opamp filter.

LTC1563-2 can operate on both single and dual 5Volt supplies. As our signal is bipolar therefore we can't use the single supply approach as it will give us only half the swing at the output. So we are using dual 5Volts supplies.
LTC1563-2 can operate in two modes: the high speed and the low power modes. The performance characteristics of the filter in high speed mode are far superior to that in the low power mode. Low power mode is suitable for battery operated portable equipment. Since our design is not portable therefore power is not an issue for us. That's the reason we are operating this filter in the high speed mode rather than in the low power mode.
The more the filter orders the greater the group delay that's introduced. To make our design flexible and adoptable the user is provided the ability to select between a 4th order Bessel filter and an 8th order Bessel filter. Obviously if you want lesser group delay then you will likely to be using the 4th order Bessel filter. If delay is not an issue then one can select the 8th order Bessel filter to get the maximum attenuation.

**This filter is essential and is technically know as the anti- aliasing filter. It limits the signal bandwidth so that when it is sampled, no aliases appear in the output of the ADC. Anti-aliasing filters like the amplifier stage must be fast enough to be used with a high speed 16-bit ADC. Luckily for us, LTC1563-2 has been especially deigned for the 16-bit high speed ADCs. So it means that by the time ADC samples, the output of the filter would**

**have settled to within ½ LSB values thereby giving us the best performance.**

**F. <u>Buffer Stage</u>**

As we are using 16 bit SAR ADC, therefore its necessary to buffer the signal before giving it to the ADC.

SAR ADCs operate in two modes: the sample mode and the hold mode. In sample mode the internal sampling capacitor of the ADC charges and in the Hold mode this stored voltage is digitized. if the sampling capacitor is charged to 5Volts at the first sampling instant and at the second sampling instant the signal voltage is 2.5 volts, then the 5Volts on the sampling capacitor will oppose the incoming 2.5 Volt signal. This is technically termed as the Kick-back Effect. In this case 5-2.5 volts is the voltage kicking back into the signal stage. This kick-back voltage changes the signal value that is sampled and thus has a very deteriorating effect on the overall performance of the system.

To minimize the side effect of the kick-back voltage, the output of the filter must first be buffered before giving it to the ADC. The buffer stage is again based around AD797 Opamp. Our ADC has two operating signal ranges. In the ±2xVREF range the input bipolar signal must not exceed ±5 Volts peak-to-peak. In the ±4xVREF Range the input signal must not exceed ±10Volts peak-to-peak. It's better to use ±4xVREF range because it improves both the SNR and THD performance metrics of the ADC. As the out put of the anti-aliasing filter is ±5 Volts therefore to give a ±10Volts to the ADC we need to amplify this signal by a gain of 2.The buffering action of the AD797 is not affected by changing the gain of the buffer from 1 to 2.Infact this buffer of gain equal to two is recommended by the vendor itself in its datasheet.

The AD797 in the buffer stage is powered by 15 Volt dual supplies. Thus with these supply voltage we can get a linear swing of ±10Volts on the output. An optional flywheel circuit recommended by the Texas Instruments is also employed in front of the buffer stage. Its aim is to further decease the effect of the ADC kick back voltage. Its effect on the performance of the circuit will be tested once the PCBs are made .If the performance is decreased by the introduction of this RC filter then we will completely by pass this stage by 0ohm resistor. The value of resistor and capacitor was calculated by using the formula given in an application note provided by the Texas instruments for the SAR ADCs.

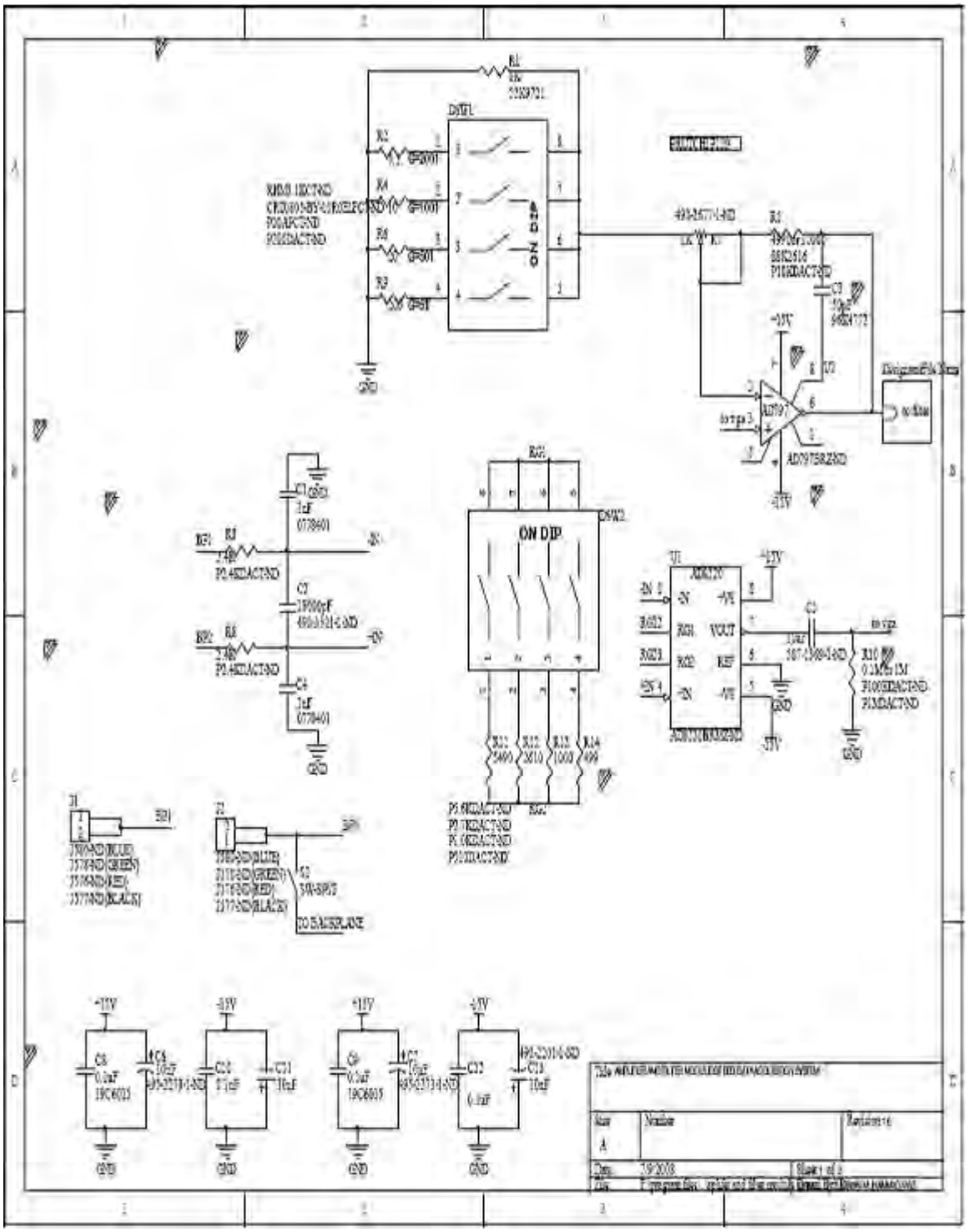
ON DIP
AD797
AD797BRZ-ND
ON DIP
GND
TO BASEPLATE

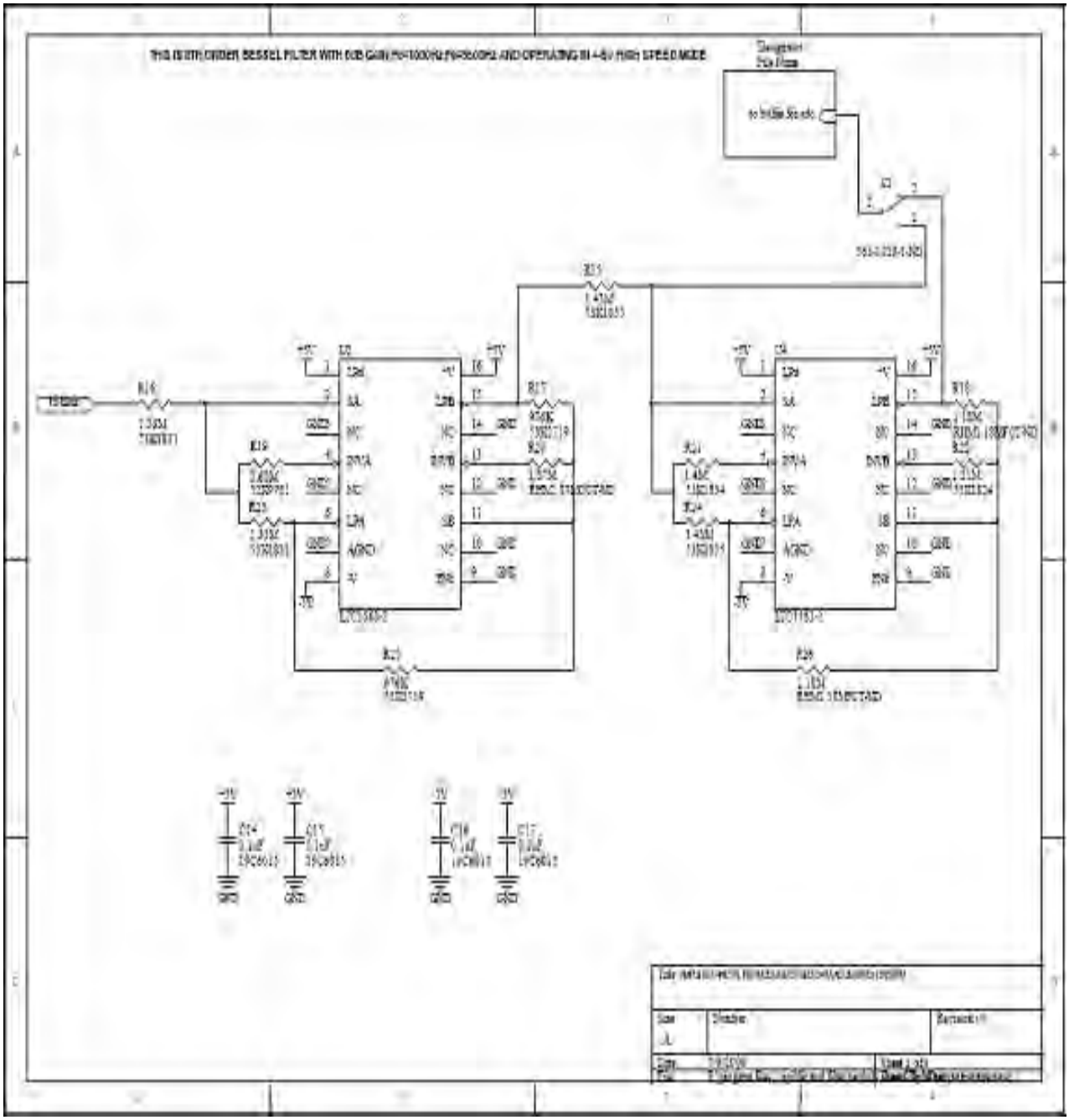

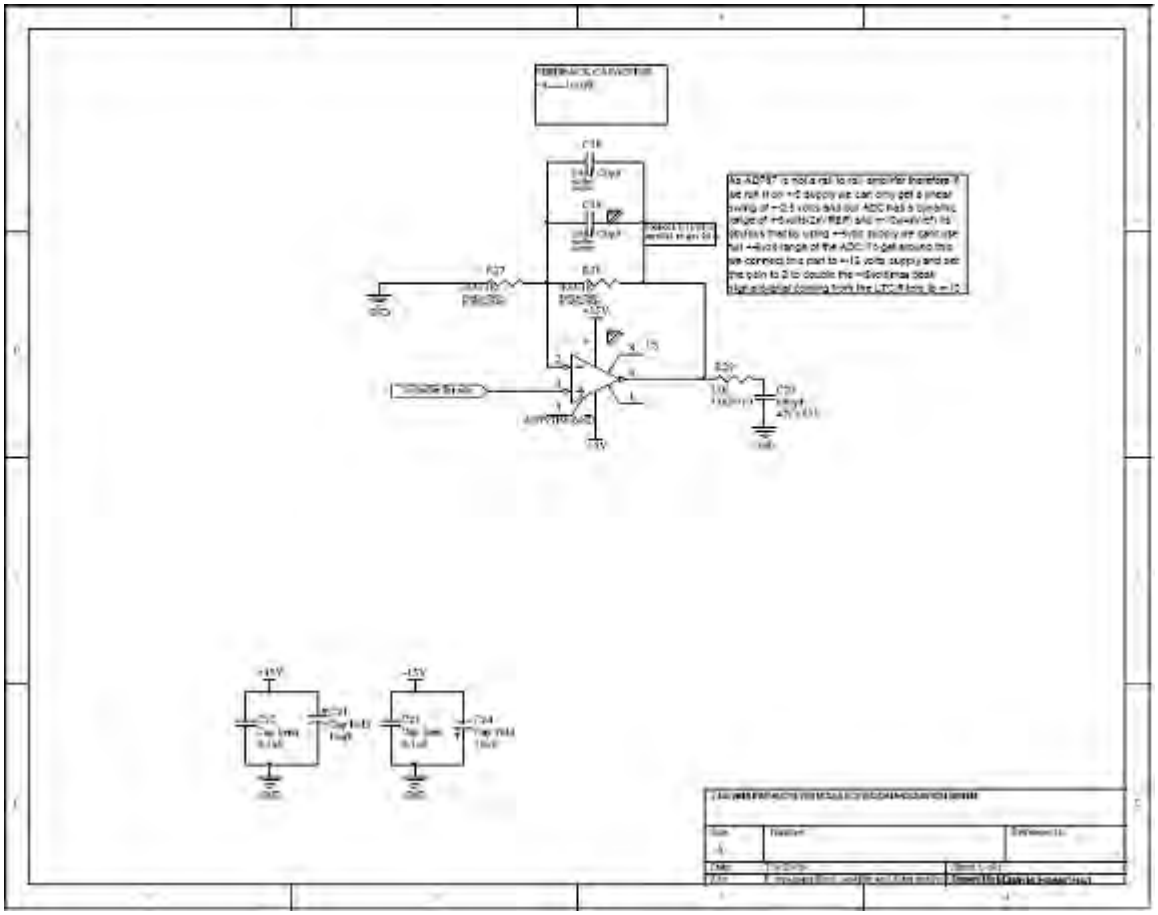

### 3.1.6 ADC Module

After the amplification and anti-aliasing the signal is passed on to the ADC module. There were two choices available as to which DAQ architecture can be used. These choices are:

A. Simultaneous Sampling Architecture - Simultaneous Sample and Hold (SSH)
B. Simultaneous Sampling Architecture - Multi-ADC

**A. <u>Simultaneous Sampling Architecture - Simultaneous Sample and Hold (SSH)</u>**

The two most common simultaneous sampling architectures are simultaneous sample and hold (SSH) and multi-analog-to-digital converter (ADC). The SSH architecture is a derivative of the multiplexed (mux'ed) architecture, the most common architecture used by mid to high channel-count data acquisition devices. Multiplexed devices use one common amplifier and ADC to sample many input channels, resulting in a time delay between contiguous samples. This time delay can be minimized but is limited by the performance of the ADC/amplifier combination. In order to achieve simultaneous sampling with a multiplexed architecture, the data acquisition device must contain SSH circuitry for each input channel before the ADC/amplifier. This SSH circuitry can either be designed on the data acquisition device or can be purchased in addition to the data acquisition device in the form of signal conditioning.

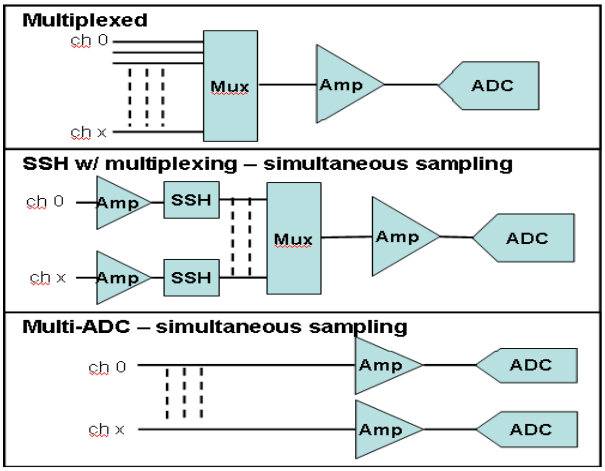


In operation, the SSH circuits track the incoming signals before each input scan. Just before a scan begins, the data acquisition device simultaneously places the SSH circuits in hold mode where a capacitor within each SSH circuit maintains a constant voltage. After all inputs are scanned in order, the data acquisition device returns the SSH circuits to tracking mode and waits for the next hold mode command. Using the SSH method, the input voltages are simultaneous, even though the inputs are sampled at different times.

Historically, the SSH architecture has been popular for mid to high channel-count simultaneous-sampling systems, mainly due to cost per channel. However, when this architecture became popular more than 10 years ago, it was much less expensive to include an SSH circuit per channel and have one ADC/amplifier rather than have an ADC/amplifier per channel. During the last 15 years, a typical 16-bit ADC has come down in price by approximately 75%, making it much more cost effective to use an ADC/amplifier per input channel. Since the cost per channel – compared to a parallel multi-ADC architecture – is now much less of an issue, several other trade-offs in the SSH/multiplexed architecture become more important. The addition of SSH circuitry adds settling time complexities and latencies to an already complex multiplexed architecture. The latencies of the

SSH circuitry, including hold mode and track mode settling time, as well as the shared scan rate among all input channels, lessens the applicability of these devices to high sample rate simultaneous sampling applications such as sound, vibration, or transient recording.

For example, when a multiplexed device capable of 100kSample/s scans 8 channels, the scan rate per channel is divided down to 12.5 KSample/s per channel. With the addition of SSH circuitry and the inherent latencies, the typical scan rate for each channel is further reduced by ~30% to approximately 8.3KSample/s per channel. The multiplexed architecture is not optimized for scan rate per channel, an important consideration for simultaneous sampling applications. The addition of SSH circuitry further reduces its applicability.

Multiplexed data acquisition devices, with or without SSH circuitry, are typically optimized for DC measurements due to the types of signals which are most commonly measured: temperature, static strain, static pressure, etc. Since these multiplexed data acquisition devices share the same ADC/amplifier combination for multiple input channels, the ADC/amplifier must be able to absorb large changes in the input at high scan rates while maintaining sufficient DC accuracy. When a multiplexed data acquisition device is optimized for settling time error, or errors caused by one signal affecting an adjacent signal in a sample list, the by-product can be distortion at mid- to high-input frequencies. Distortion minimally affects the temperature or pressure readings. However, distortion at mid- to high-frequencies is not acceptable for dynamic measurements. Distortion can be minimized in the multiplexed architecture, but only through additional circuitry and cost, negating the main reason the multiplexed architecture was initially considered.

## B. <u>Simultaneous Sampling Architecture - Multi-ADC</u>

The multi-ADC architecture delivers higher sample rates per channel, better accuracy, and less complexity. This architecture does not require a multiplexer to route all incoming signals to a single ADC nor does it require additional SSH circuit to achieve simultaneous sampling. The absence of multiplexers and SSH circuits greatly simplifies the signal path on the data acquisition device. This simplification permits the optimization of both DC measurements and dynamic measurements, while maintaining a low cost per channel. The multi-ADC architecture is flexible, offering the capability to sample multiple incoming signals independently or simultaneously. In addition, the input sample rate is not divided among the number of inputs but is constant. [10]

owing to the great advantages in using simultaneous sample and hole multiple ADC architecture we are using it our design. For this architecture you need one reasonable fast ADC per channel.

**WHY AD7656:** If we use one ADC per package for each of the 18 channels then it would occupy a lot of board space. Moreover, as our design is modular we would require 18 ADC modules which will increase the fabrication cost as well. For these reasons, we have selected an ADC (AD7656) that has 6 simultaneous sample and holds and dedicated ADC per channel. In other word this ADC has six simultaneous sample and hold circuits along with 6 ADCs, one for each of the six channel .All of these SS&H and ADC are housed in a single 64 quad flat package. Thus to get an 18-channel simultaneous sample and hold data acquisition system we need only 3 such ADCs .Thus by using 3 AD7656 ,we are able to get 18 simultaneous sample and hold channels with a dedicated ADC per channel. This ADC thus saves us a lot of fabrication cost. It has a very convenient out put as well. You can configure it to work in serial mode or parallel mode. We are using it in 16-bit parallel mode because it allows us easily

interface this ADC with the GPIF (General Programmable Interface) of Cypress EZ-USB chip.

Low power consumption is another advantage of using ad7656.It consumes a lot less power then 18 Individual ADCs combined.

Another advantage of using AD7656 is that it has an on-chip reference. One can also use an external reference if a more precise one is available. The fact that the reference signals from external reference needs to be routed to just one chip rather than 6 individual chips makes it much easier and economical to use the external reference source. But for most case the internal reference is good enough that's why we are not using any external reference.

When we chose AD7656 for our design, there was another contender .It was Texas Instruments ADS8364. It has differential input which requires differential signal drivers. Now differential driving stages are difficult to design .Moreover, AD7656 is very easy to interface to the GPIF of the Cypress EZ-USB chip.ADS8364 one the other hand is not so easy to interface. Further more, the performance metrics of AD7656 far exceeds the performance characteristics of ADS8656.so that's why we rejected ADS8364 and selected AD7656 for our design.

One of great advantages of using AD7656 is in its easy interfacing to the GPIF state machine. The GPIF is a 16-bit parallel bus interface. It is also provided with 6 control signal and some 5 ready signals. The ready signals of the GPIF can be connected to busy signal from the ADC in order to monitor the conversion process. Once the conversion is complete control signals connected to the read of the ADC can be clocked 6 times in order to read the 6 16-bit data from the 6 output buffers of the ADC sequentially. The data put first on the 16-bit bus

belongs to channel 1, the next data read is from channel 2 and so on. the last data read is from channel 6.As we have 18 channel in total as we are using 3 AD7656, we can connect their 16 bit buses in parallel because at each time only one ADC can put its data on the 16-bit multiplexed whereas the output from the remaining two ADCs can tri-stated so that there is no conflict situation between the three ADCs.

The active ADC i.e. the ADC whose output bus is not tri-stated can be easily selected by driving its chip select signal low and driving the chip select signal for the other two ADCs high. Thus it allows us to use any number of ADCs by using only one ADC at a time. Thus by using AD7656 one is not limited to just 18 channels. If you have 24 amplifiers then you can use four AD7656 and multiplex their output buses to get a 24 channel simultaneous sample and hold multi-ADC architecture.

### 3.1.7 Digital isolator module

The data from the multiplexed bus must be passed onto the Cypress EZ-USB chip. But before we do so the two modules i.e. the ADC module and the USB module must be galvanically isolated from one another.

**Why isolation is required?**

There is an inherent need for galvanic isolation. The ADC ground is the ground of the power supply that’s powering it, whereas the ground of USB chip is the ground of the computer’s power supply. To pass data from one module to another these two grounds must be connected to one another. If they are left unconnected then data from one module means nothing to the other module. Ideally both the grounds must be at the same potential. However, in actual practice both the grounds are at different potential with respect to one another.

When we connect them together a ground loop is established. Large currents circulate within the newly formed ground. These large circulating currents give rise to voltage drop across the entire ground plane. Thus every IC in the system starts referring to voltages other then 0volts. This produces erroneous result and may even damage some of the components. So there is a need to pass data through the interface but at the same time to keep the two grounds separate. That's where digital isolator comes into play. Digital isolator provides the ability to transfer data from one system to another while keeping the two grounds separate.

The digital isolator used in our design is ISO7420MDW.which is 4 channel 150mbps digital isolator from Texas Instruments. These isolators are based on capacitive galvanic isolation .these devices are very robust and provide fairly high degree of isolation while consuming very small amount of power. They can operate from both 3.3volts or 5volts supply. We are connecting both sides to the 3.3volt supplies. The ADC side supply comes from the main power supply whereas the USB side supply comes from the USB bus itself. Thus the two grounds are kept separate by the ISO7420MDW while allowing the data to pass through.

There was one other candidate when we selected the digital isolator. This was the analog devices ADuM series of digital isolators. Unlike the digital isolators from Texas Instruments which are based on the capacitive coupling principle, these isolators are based on the inductive coupling principle. Owing to their internal construction they consume a lot more power than their counterparts from the Texas Instruments. Moreover, Analog Devices isolators are 2 to 3 dollars more expensive then the Texas Instruments isolator. Even more, the Texas Instrument isolator can work at data rates up to 150Mbps whereas the best isolator from Analog Devices can work at the most at 100Mbps .All this made ISO7420MDW from Texas Instruments a perfect candidate for our design.

Every signal coming to the USB chip from the ADC and every signal going from USB chip to the ADC must be passed through the digital isolator. This requires about 7 ISO7420MDW chips to be used in all.

In our design the digital isolator is connected between the ADC and the USB chip. There is another way to do this. The isolator can be connected between the computer and the USB chip. In this way only one digital isolator chip is required. However, this approach works only if the USB data rate is less than 150Mbps. So this approach works only for low speed and full speed USB. It can’t cope with the high data (480Mbps) of the high speed USB data acquisition such as ours.

So connecting a lot of digital isolators between the ADC module and the USB module was the only alternative left for us.

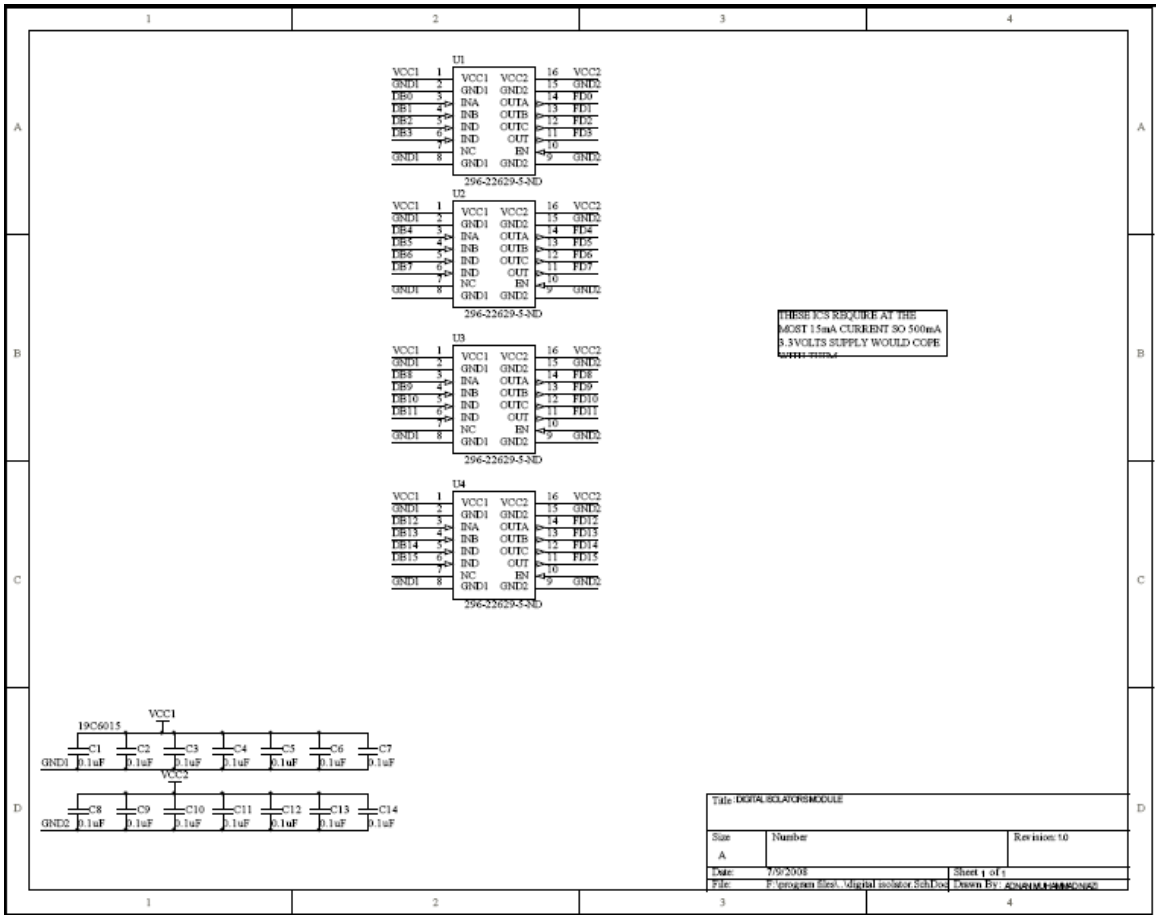
U1
VCC1 1
GND1 2
DB0 3
DB1 4
DB2 5
DB3 6
7
GND1 8
VCC1 VCC2
GND1 GND2
INA OUTA
INB OUTB
IND OUTC
IND OUT
NC EN
GND1 GND2
16 VCC2
15 GND2
14 FD0
13 FD1
12 FD2
11 FD3
10
9 GND2
296-22629-5-ND
U2
VCC1 1
GND1 2
DB4 3
DB5 4
DB6 5
DB7 6
7
GND1 8
16 VCC2
15 GND2
14 FD4
13 FD5
12 FD6
11 FD7
10
9 GND2
296-22629-5-ND
U3
VCC1 1
GND1 2
DB8 3
DB9 4
DB10 5
DB11 6
7
GND1 8
16 VCC2
15 GND2
14 FD8
13 FD9
12 FD10
11 FD11
10
9 GND2
296-22629-5-ND
U4
VCC1 1
GND1 2
DB12 3
DB13 4
DB14 5
DB15 6
7
GND1 8
16 VCC2
15 GND2
14 FD12
13 FD13
12 FD14
11 FD15
10
9 GND2
296-22629-5-ND
THESE ICS REQUIRE AT THE
MOST 15mA CURRENT SO 500mA
5.3VOLTS SUPPLY WOULD COPE
WITH THEM
VCC1
19C6015
C1 C2 C3 C4 C5 C6 C7
GND1 0.1uF 0.1uF 0.1uF 0.1uF 0.1uF 0.1uF 0.1uF
VCC2
C8 C9 C10 C11 C12 C13 C14
GND2 0.1uF 0.1uF 0.1uF 0.1uF 0.1uF 0.1uF 0.1uF
Title: DIGITAL ISOLATORS MODULE
Size
A
Number
Revision: 1.0
Date: 7/9/2008
Sheet 1 of 1
File: F:\program files\..\digital isolator.SchDoc
Drawn By: ADNAN MUHAMMADNAZI

### 3.1.8 USB module

There data coming out from the ADCs must be given to the computer. The bus used must be fast enough to cope with high data rate of our data acquisition system. Each channel produce data at a rate of 250Ksps and there are 18 channels. The legacy parallel port just can't transfer at such high data rates.

Parallel port either can't cope with such high data rate. The other candidates left are PCI, PCI Express, USB and Ethernet bus. The most popular of them all and the most easy to use is the USB. So that's why USB interface was selected. Having decided that, another problem needed to be address. The problem was which USB chip to select. There are so many vendors of USB chips that it took us nearly two months in deciding as to which to use. There are many companies which make USB chip.

These include:

i. Cypress semiconductors
ii. Texas instruments
iii. Phillips semiconductors
iv. Silab
v. Microchip
vi. Atmel

**Why we used Cypress USB Solutions?**

Every USB chip from each of these vendors was studied and after two months of careful considerations we decided to use Cypress EZ-USB FX2LP CY7C68013A high speed USB microcontroller from Cypress Semiconductors. Cypress Semiconductor is the world leader is USB and touch screen controllers. Cypress USB chip is unlike any other of its counterparts. While other USB chips require

special burners to program their onboard EEPROMS, Cypress USB chips does not require any burner at all. The USB code is automatically downloaded from the computer using Cypress's patented Enumeration/Re-enumeration technique. The USB device is connected to the USB bus. The default USB, when properly configured, downloads the USB device code, then resets the USB device, thereby simulating a USB disconnect from the bus, and comes connected again, only this time as a new USB device. All this happens at such a fast pace that this programming phase goes unnoticed. This brilliant architecture allow the code to be changed even after deployment of the chip thereby allowing the designers the ability to change the device code whenever they want without ever removing the USB chip from the PCB.

Cypress Semiconductor is a very generous Semiconductor Company. It provided us USB chips for free to be used in our prototype. Cypress also donated us USB development kit CY3684 and the PSoC development kit free for this project. Both these kits along with the shipment cost from Switzerland to the US and from US to Pakistan and then 20% customs clearance in Pakistan costed them about 1200$.They didn't demand even a penny from us .We got it all for free. We are very thankful to Cypress Semiconductor for its generosity. Other companies like Texas Instruments and Analog Devices are so narrow minded that they don't even provide samples to the designers from countries like Pakistan. Cypress Semiconductors generosity and its indiscriminate behavior towards its customers from all around the globe is one of the many reason for it success in the global market.

Cypress USB chips are the only USB chip which can be interface to a 16-bit parallel bus. All other USB chips form other vendors either interface to an 8-bit parallel bus or SPI or I2C buses. This 16-bit high speed parallel interface allows the designers to make high speed data acquisition systems. In short there is no

USB solution better than that provided by the Cypress USB chip. No matter what the design is Cypress EZ-USB family of USB microcontrollers are general yet flexible enough to be used. This allows the designers to stick to just one USB chip family through out his designing career rather then jumping to other vendors for every application.

We haven't done the coding for the USB chip yet. This is because we need to interface the ADC to the USB chip in order to test our code. With our shipments still pending in the US there is no way for us to code the USB chip.

The USB driver will be developed using the Jungo Windriver driver development kit that comes with the Cy3684 USB Development kit or can be downloaded from the internet as well. This driver development kit really makes it very easy to deign a driver for any USB application. It also provides the designer the ability to test the driver to check whether it's working correctly or not.

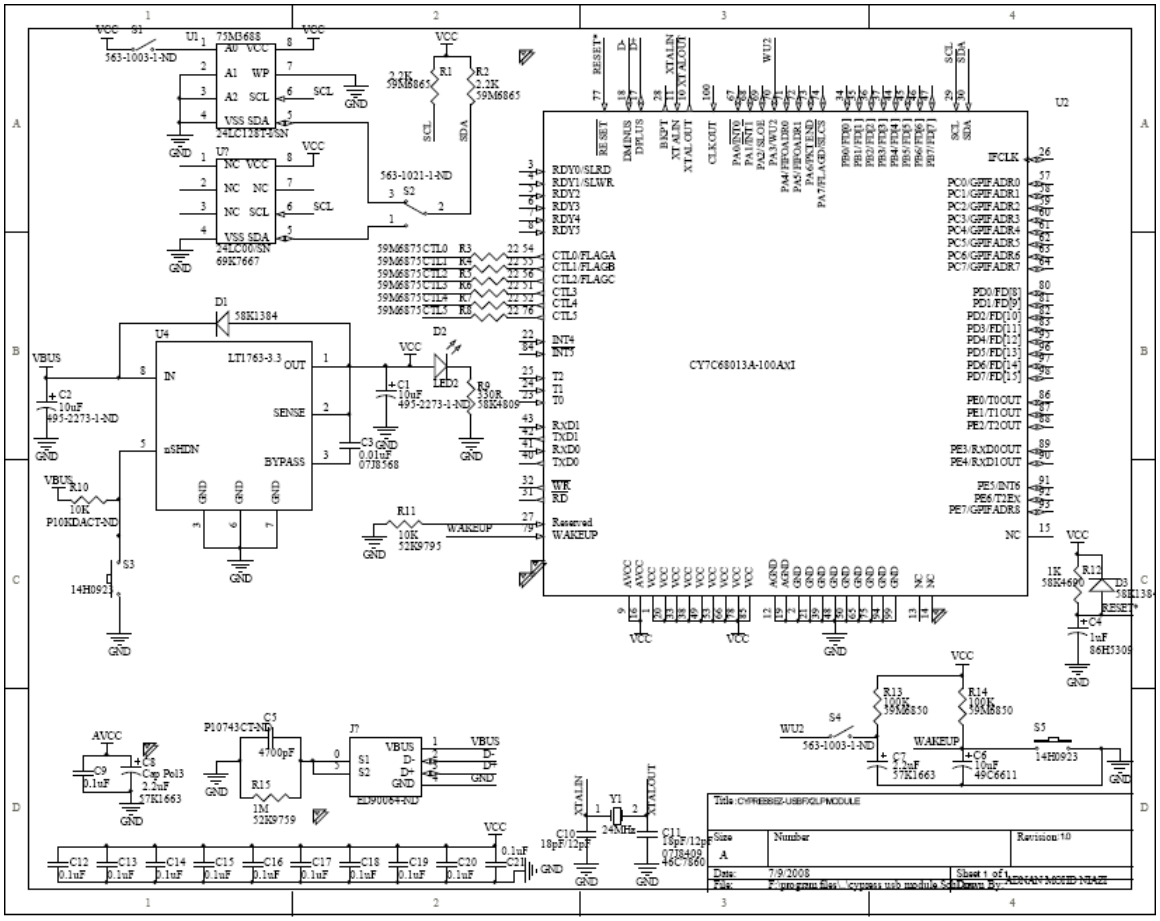
CY7C68013A-100AXI
LT1763-3.3
Title: CYPRESS-USB FX2LP MODULE
Size
A
Number
Revision: 1.0
Date: 7/9/2008
Sheet 1 of 1
File: F:\program files\...\cypress usb module.SchDoc
Drawn By: ADNAN MOHID NIAZI

### 3.1.9 Power supply module

As there are a lot of chips in a hardware that has 18 channels, therefore, it puts a unique strain on the design of the power supply. The power supply must be capable of handing the power demand of all the chips without heating. Moreover, as our hardware comes under the category of patient care equipment therefore, there are some stringent UL requirements that need to be fulfilled in order for the supply to be considered as safe. These requirements include the creepage and clearance distances, the leakage current of the transformer and the RFI susceptibility and EMI emission.

As the power supply board contains components that are linked to 220volts, there are stringent creepage and clearance distance specifications that need to be followed when routing nets. The 200volts traces must not come any closer to other traces then the distance specified by the creepage and clearance rules.

Moreover, there must be very strict control on the leakage current from the primary and secondary of the transformer. These leakages current if left unresolved can turn out to be potentially dangerous for the subject. That's why a medical grade isolation transformer is used to isolate the mains from the rest of the equipment; this prevents any accidental ground loop production if a user touches some other non grounded equipment in the vicinity. This prevention of the creation of ground loop may prevent the subject from getting a fatal shock.
The UL (Underwriters Laboratories) medical standards require that the medical grade power supply should neither produce EMI nor be susceptible to RFI. To bring our power supply into compliance with the UL specification, a medical grade RFI is used in the power inlet module. This medical grade RFI prevents common mode and differential noises from coming in or going out of the supply. It contains specially design LC filters in a very small package .This device carries

UL and CSA certifications and is thus approved for use in patient care equipment. Our hardware falls under the patient care equipment category.

The power supply has 5 different outputs i.e. +15volts, -15 volts, +5 volts, -5 volts and +3.3volts. The +15 volts and +5 volts supplies are obtained form cascading two LT1083 adjustable positive linear regulators with 7A current capacity. The -15 and -5volts supplies are obtained from cascading two LT1185 which is a 3A negative adjustable linear regulator.

The cascade design improves the efficiency of the design by decreasing the power wasted that would normally occur in a parallel design. Both LT1083 and LT1185 have current capacity high enough that they can withstand the current load from the ICs at the end of the cascade.

To power the digital isolator's ADC side, a 3.3 volts regulator LT1763-3.3 is used. It has a current capacity of 500mA.whuch is sufficient for the 7 or so digital isolators used in the design. Special attention to the input and out capacitor type and ESR is given so as not to destabilize the linear regulators. Both the isolation transformer and the step down transformers are protected from damage by over current by using PTC (Positive Temperature Co-efficient) resettable fuses. The devices perform the same function that a legacy fuse can perform however unlike the traditional fusses that require replacement once they have done their job; the PTC resettable fuses repair themselves. This cool feature reduces operation cost .when an over current situation occurs the PTC fuses become warm and undergo a phase change .This phase change causes their resistance to change from very low to extremely high. This shuts down the circuitry ahead, thereby, protecting them from any damage. Once the over current condition is removed the reverse phase change occurs which brings the fuses from its non conductive state to a

more conductive state.PTC resettable fuses are smaller then their legacy counterparts. They are also a lot cheaper and more reliable.

As isolated 220VAC is valuable asset, therefore we have taped it out using an IEC female connector onboard the power supply. This isolated power supply can power up a computer linked to a patient care category data acquisition system. Isolated power can be use to power up expensive test and measurement equipment where it can be used to break any potential ground loop Thereby preventing component or equipment damage.

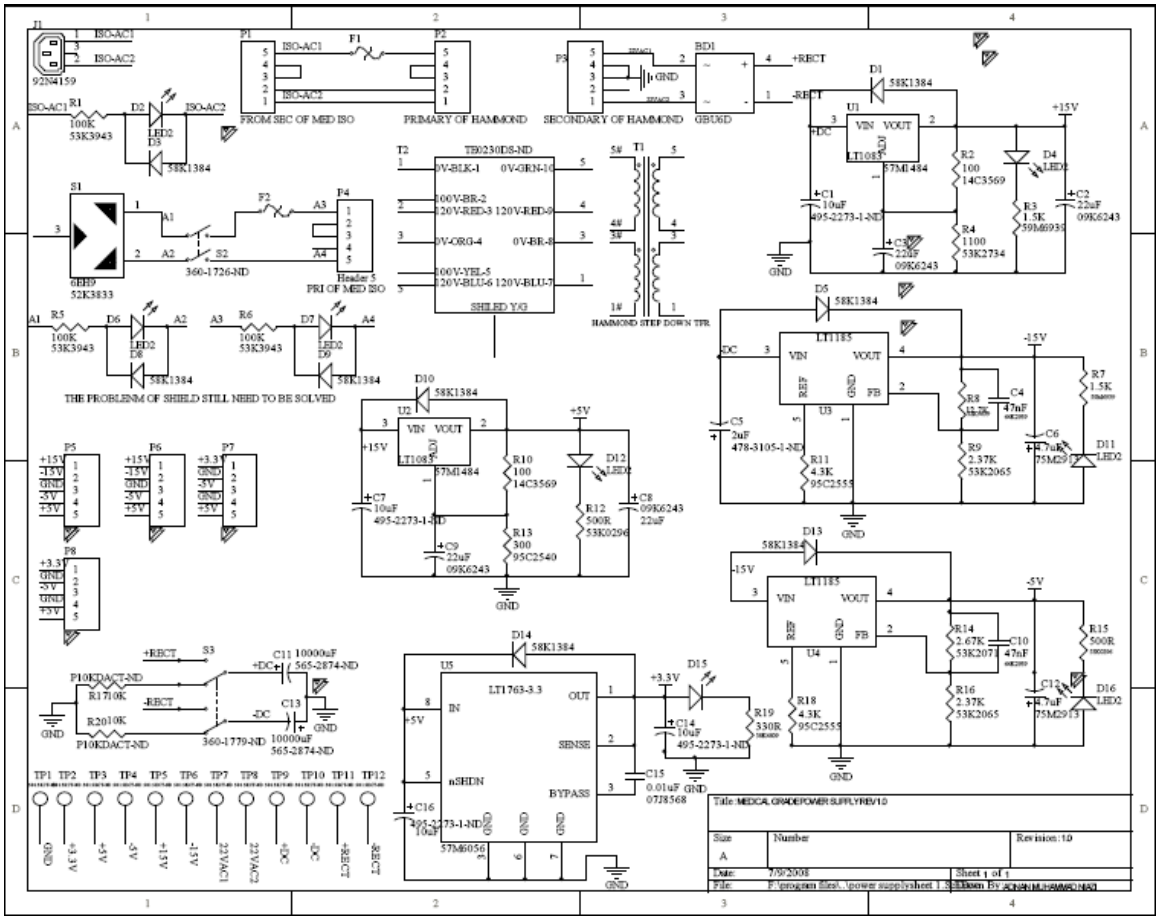
FROM SEC OF MED ISO
PRIMARY OF HAMMOND
SECONDARY OF HAMMOND
HAMMOND STEP DOWN TFR
PRI OF MED ISO
THE PROBLENM OF SHIELD STILL NEED TO BE SOLVED
LT1763-3.3
LT1185
Title: MEDICAL GRADEPOWER SUPPLYREV1.0
Revision: 1.0
Sheet 1 of 1
Drawn By ADNAN MUHAMMAD NAD

## 3.2 THE SOFTWARE STAGE

### 3.2.1 LABVIEW AND LABVIEW VISA

We will develop our application in LABview. When we started this project we thought we will use Matlab but we are really thankful to Allah in showing us a much easier alternative: the LABview. LABview is a graphical programming language that provides user the ability to make very complex algorithms without writing a single line of text based code. LABview is very popular software. It's really unfortunate that this software remains in oblivion for the Pakistani students and universities. It's great software and compared to Matalb more powerful and more fun to use. It has great technical support as well. One can post National Instrument any problem and they will find you the solution.

It is very easy to transfer the USB data to LABview using the LABview VISA software. Once the USB data is acquired in the LABview it will be demultiplexed and then preprocessing algorithms will be applied which will separate alpha activity from other activities. Once that's done, classification algorithms will be applied to make sense of the data that's being acquired. The output of this classification algorithm then drives our application.

Once the hardware is up and running then the possibilities are endless. We will be in a position to design whatever application we want. The only thing we need now is a fully functional EEG data acquisition system powered by LABview.

Although this project is very lengthy and may take a year or more to complete we are determined more than ever before to make it a reality. We don't want to leave this project incomplete like the students of other universities did.

# CHAPTER 4

# EEG DATA ACQUISITION SYSTEM – PCB DESIGN & FABRICATION

## 3.3 PCB DESIGN

### 3.3.1 Which software to use?

When we started this project we were well versed with Proteus design suite for the design of PCB. However Proteus is simple software which is meant for the beginners. It can't cope with the demands of a professional or power user. Proteus has no ability for differential routing. It has no interactive routing facility. Its polygon pour is not very comprehensive .It has no project viewer. It has no footprint manager to quickly see the footprint of all the components and change them if necessary in a very fast manner. It has no signal integrity check. Its auto router is very basic. Its 3D is very basic as well. In short this software is very primitive and is not suitable for challenging design such as ours.

Owing to the short coming of Proteus design suite we started learning Mentor Graphics Board Station Flow. We had heard a lot about the power of this software. Companies like Intel use it. So we decided to give it a try. Within a week we became so bore of this software that we started looking for something else. Mentor graphics BSF is very difficult to use. Its help is so pathetically boring that you can't read it for more than an hour. Although the software is powerful, to avail these powers you need some serious training from the representatives of Mentor Graphics. Without prior training, it is impossible to even operate such cumbersome software. To get training you need to pay Mentor Graphics about

5000 $. People like us can’t afford it. Every upgrade from Mentor Graphics requires you to pay a lot of money. So it’s really silly to use software that completely drains you financially. Moreover simple tasks such as cut, copy and paste are very difficult to do. I wonder why such powerful software is lagging so much behind in these simplest of tasks. Even more the user interface is so old that it looks like you are working in software in windows 98.This software although powerful lags behind in user friendliness .if one is going to learn new PCB software then it must the first and the last PCB software that he should learn.

### 3.3.2 Why Alitum Designer?

Owing to the weaknesses of the Mentor Graphics design suite we switched to Altium Designer DXP. All I can say about this software is that it’s just amazing. It’s very easy to use but at the same time very powerful as well. It’s the worlds first unified electronic design software. We recently upgraded to Altium Designer Summer 08 edition which provides even more powerful features to the user. Altium Designer is the only software in the world that allows you to combine ECAD and MCAD. You can check whether or not your design fits in the casing before even manufacturing a prototype. It has stunning 3D visualizing capabilities which harness the power of Windows Direct X feature to deliver the ultimate 3D PCB visualization. With 3D you can see your board before it’s manufactured and see where the sharp edge needs to be smoothed so to speak. Altium Designer has a very impressive project structure which allows one to gather project related data and link them to your project so that it’s easy to refer to whenever required. Altium also provides the ability to route differential track and also provide length matching capabilities .its smart interactive router speaks for itself. It has the ability to push and shove the existing vias and tracks to make room for the new tracks. This make routing the nets extremely easy .with Altium designer you can

reuse the design wherever you want by using design snippets. Altium allows the designer to divide project into sheet and with sheet symbols you can have a hierarchical view of your design. In short Altium Designer's great features and ease of use made us to select this software for our project and we very happy to have made the right choice. We don't think that any one who has ever tasted Altium Designer will ever use boring software like Mentor Graphics Design Suite.

All our schematics have been captured in the Altium Designer. All that's required now is to translate the schematic into the PCB layout. Our shipment form Digikey which contain 90 different parts is still pending. Nearly 90 percent of the parts have datasheets that have footprint data in them. The remaining 10 percent of the part have no footprint. Their footprints will be designed only when the shipment arrives. that's why we cant go the PCB layout stage without first having all the footprints .my experience with PCB designing tells me that its  better not to layout the PCB at all rather then to have to change the layout once the footprint becomes available.
Once we are through the layout stage, the actual PCB will be fabricated. About 95 percent of the parts are surface mount. The rest are predominantly connectors in through hole technology. So the overall PCB is SMD predominately.

The PCBs will be fabricated in my own lab. The copper clads are pre-sensitized double sided copper clads with 1 oz copper and manufactured by MG chemicals. This is an industry standard product and is used for fabricating high density PCBs. theses copper clads have a positive acting UV sensitive layer on it. The positive is printed on a transparency. Then a white background is placed behind it. Then every trace on the print is painstakingly inspected for pinholes or any other misprint problem. If one is found the print is rejected and a new one is printed and the same procedure is applied again until no defect is found. It is very

essential to have a flawless print .this is because defects in the positive will translate into defects in the actual PCB itself. A flawless print will result in a flawless PCB. A 10x eye loupe is usually enough to inspect the print.

We are using Samsung laser printer for printing the positive onto the transparency. Transparencies require special printing conditions. Our experimentation shows that by using “thick” in the printer properties results in the darkest and finest print of all on a transparency.

Once a flawless print is obtained ,the protective layer on the copper clad is removed and the transparency is placed on it .UV light with 340nm sources is turned on .These 15 watt 18inch Bi-pin UV tubes are not available in Pakistan and will be shipped from US. once they arrive they will hooked into a suitable fixtures with 15Watt ballast .Depending on the luminous intensity of the tubes and the exposure distance, it will require some experimentation with the board in order to find the best exposure time so as not over or underexpose the PCB. The regions which are exposed to light harden and the unexposed regions remain chemically active. These chemically active regions are removed by dipping the exposed PCB into a solution of sodium hydroxide.

Now our PCB is ready for the etching stage. Many people use ferric chloride solution. However ferric chloride is messy and expensive. Another approach is to use concentrated nitric acid. However nitric acid reaction with copper produces very pungent and potentially harmful nitrous oxide gas (NO2).theses fumes when inhaled start to burn your lungs. Although we experimented with it and found out that this is the least expensive chemical to work with, we still wont use it for our project because of the serious health hazard that it posses .so we are using concentrated hydrochloric acid along with hydrogen peroxide as an oxidizer. Without the presence of hydrogen peroxide the copper cannot be attacked by the acid.

To ensure uniform etching of the copper clads bubbling action is necessary. This bubbling effect is produced by adding a small amount sodium hypophosphite to the etching solution. The bubbling produced by this chemical ensures a uniformly etched PCB.

Once etched, the hardened polymerized regions can be removed through an organic solvent. We have Acetone, 2-Porpanol, And Methyl Acetate Ester at our disposal so removing this exposed layer won't be a problem.

Once this layer is gone the copper layer is exposed. This copper layer is very sensitive and tarnishes very quickly .Moreover it's very sensitive to oils on our hands so lint free gloves will be used in handling these PCB. These PCBs will be immediately immersed in a solution of immersion silver. The immersion silver contains a mixture of Thiourea, Sulphuric Acid and Silver Nitrate. Ammonium chloride is used as polishing agent because silver is deposited uniformly if the copper dipped in immersion silver has a polished surface. The immersion silver solution causes a displacement reaction to occur. It displaces a few layers of copper atoms with silver atoms .this layer of silver protects the underlying layer of copper from being oxidized by the atmosphere. This is exactly the same process used in industry .in industry this stage is called the finishing stage. The best finish is called ENIG (Electro-less Nickel Immersion Gold).Its chemistry is too much involved and expensive to use on a small scale such as ours. The next best finish is the immersion silver. It's relatively less inexpensive and less involved process then that of the ENIG finish.

Silver coating not only prevents copper from oxidizing it also helps during the soldering stage .solder contains tin lead alloy. It's difficult for this alloy to make a good solder joint with the copper. When silver is deposited on the copper layer, it

becomes a lot easier to solder. The bond between silver and tin lead alloy is very smooth resulting in a perfect solder fillet and decreasing the possibility of a cold solder joint. Thus the chances of solder related failures dramatically decrease by using silver finishing.

After silver coating a layer of dry film solder mask is laminated on to the PCB. Solder mask is a greenish layer which has many functions. First it protects the underlying layers from the environmental factors thereby increasing the life of the board. Secondly it decreases the possibility of formation of solder bridges between adjacent pins. It really makes the soldering job very easy. You can make a through hole low density circuit with out this layer but you cant hope to make a high density surface mount board without this layer. So it's very essential in our project. In industry liquid photo-imageable solder mask Or LPISM is used. Although easy to apply this type of solder mask requires a baking oven to cure it. As we don't have access to convection ovens that's why this type of solder mask was rejected for being highly nonfeasible. So instead of using liquid photo-imageable solder mask we are using dry film solder mask. This solder mask is bought from MegaUK. This type of solder mask is very expensive and it costs a lot on shipment as well. However we had no other alternative at our disposal. The dry film solder mask has two layers like a sticker .the sticking surface sticks to the PCB when the protective layer over it is removed. To make sure that the solder mask has fully gone all around the traces and in the crevices between the traces, the PCB with solder mask on top of it is passed through a hot roller laminator. The laminator is set at $110^{o}C$ as recommended by its manufacturer .this laminating acting ensures that there is no place left on the board where solder mask is not sticking to the PCB.

The solder mask is UV sensitive. Those areas that are not to be removed must be exposed to the light. This exposure action polymerizes the solder mask

wherever the UV light falls. Those regions where no light gets don't polymerize. After the UV exposure is complete the PCB is dipped in a mild sodium hydroxide solution. This caustic solution dissolves unexposed solder mask layer. Thus we get the entire board covered with solder mask except those regions which need to be soldered.

The remaining solder mask is not yet fully cured. To fully cure it, it can either be heated in a convection oven or exposed to UV light for about an hour. I prefer to keep the circuit board for a whole day in sunlight. UV lights are very expensive and prolonged operation period any severely deteriorate their life span.

Now the PCB is ready for silk screening. Silk screen layer is a very useful layer especially when you are hand soldering the PCB. It guides you as to where to install a given component and in which orientation. Without this layer you will mess up the entire circuit board. Silk screen layer also allows one to add important instruction such as caution signs, switch action, fuse ratings precaution and bar code tracking patterns etc on the board. No professional PCB is complete with out a silk screen. On a doubly occupied circuit silk screening on both sides are required. On a singly occupied circuit just one is required. The silk screen is printed using the traditional silk screening process. In silk screening process a UV sensitive emulsion is coated onto a silk mesh. We are using a 200 mesh size. The larger the mesh count the finer the print. We still need to experiment with 250 mesh size. After the emulsion is applied, the silk screen print is placed on the emulsion coated mesh. The entire assembly is then exposed to UV light. The areaS which are exposed to light undergo a chemical change which makes them insoluble in Water. The rest of the areas that don't receive light quickly dissolve in water leaving behind a stencil through which ink can seep. Once this silkscreen stencil is formed its placed on the PCB and properly aligned with it.Ink is poured onto the stencil and then gently spread with

a rubber squeegee. After the first stroke a second more firm stroke is done. This stroke makes the ink from the first stroke to seep through the openings in the silkscreen stencil and deposit on the PCB.

After silk screening is done the ink is allowed to set. Once that's done the board is ready for soldering. SMT boards can be soldered by screen printing the board with solder paste. However solder paste is very expensive. A 35 gram syringe of solder paste costed us 56 $.Screen printing the solder paste requires a lot of solder paste which makes it very unfeasible to screen print the solder paste. Therefore, SMD chip resistors and capacitors are hand soldered with Temperature Controlled Soldering Station.

The most difficult part to solder is the 64 pin 0.5mm pitch AD7656 and 100 pin 0.65mm pitch Cypress USB chip. The ADC is extremely expensive. It costs 30$ a piece so we can't afford to have any screw ups. We have done a lot of practice on soldering fine pitch ICs on spare motherboards that we bought from GUL HAJI. Only practice can make us ready the daunting task of hand soldering such fine pitch chips.

### 3.3.3 ESD protection

ESD is the main concern when dealing with such exotic and expensive chips. You can zap a chip just by touching it. This will render the chip useless without you knowing it. All our soldering station and pick and place stations are ESD safe. Moreover during the soldering stage we will be using ESD wrist staps. These help in diverting the ESD to earth thereby sparing the chips.

### 3.3.4 What can go wrong?

While one should hope for the best, one must also be prepared for the worst. It's our first time designing and fabricating a surface mount PCB. Due to our inexperience some things might go unnoticed during the design stage and may pop up after the fabrication stage. If this happens we will be in trouble. But thanks to our modular design, it would be easier to home in the trouble and rectify it. Moreover, the modular design will help us root out the problem in the modules that still need to be fabricated. So lessons learned from one of the modules will help in rectifying the problems in the modules yet to be fabricated, thereby, saving our energy that would otherwise be wasted in patching all the modules.

### 3.3.5 Design Debugging

To test the design we are extensively using SMD taps. Theses taps will allow us to quickly tap out important signal in order to verify that they are what they need to be. As these tap are expensive therefore SMD test points will be designed on the PCB for less important signals. These test points will be exactly he same as that used industry to be used with a bed of nails test.

# CHAPTER 5

## CONCLUSION

# REFERENCES


[5] http://en.wikipedia.org/wiki/Brain-computer_interface

[1] http://www.mathworks.com/company/newsletters/news_notes/jan06/brain.html

[2] http://www.crossroadsinstitute.org/eeg.html
Crossroads Institute: Brainwaves and EEG The language of the brain

[3] A Flexible Brain-Computer Interface By Jessica D. Bayliss, University of Rochester, Rochester New York.

[54] M.S. Middendorf, G. McMillan, G. Calhoun, and K.S. Jones, ***Braincomputer interfaces based on the steady-state visual-evoked response***, Brain-Computer Interface Technology: Theory and Practice: First International Meeting Program and Papers, The Rensselaerville Institute, Rensselaerville, New York, pp. 78—82, June 16-20, 1999.

[56] W.T. Nelson, L.J. Hettinger, J.A. Cunningham, and M.M. Roe, ***Navigating through virtual flight environments using brain-body-actuated control,*** Proceedings. IEEE 1997 Virtual Reality Annual Intern. Symposium, pp. 30—37, 1997.

[10] http://zone.ni.com/devzone/cda/tut/p/id/4105
NI Developer Zone-Simultaneous Sampling DAQ Architectures